RESIDENCE
SUPPLY



MORTICE LOCK & KEY

The Brass Door Handle

INSTALLATION GUIDE

INSTALLATION INSTRUCTIONS

Step 1:
Insert and fix lock mechanism to the door.

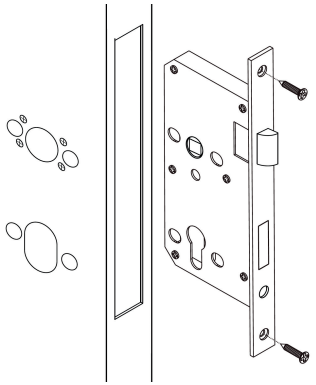

Step 2:
Insert spindle to the hole with the groove horizontal.

Step 2.2:
Fix linings with connecting screws.

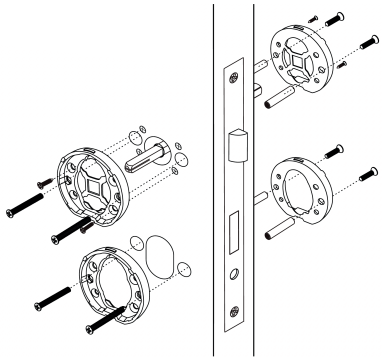

Step 3:
Remove positioning assistance from the linings.

Step 3.2:
Snap handles and escutcheons into the linings.

Step 3.3:
Pass cylinder through the escutcheon holes.

Step 3.4:
Secure the cylinder with screw.

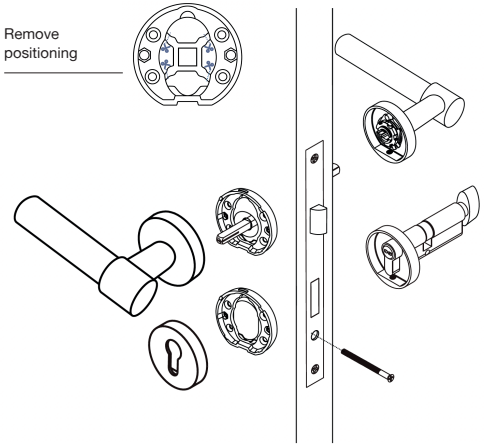

Step 4:
Fix the spindle and the linings with grub screws for both sides.

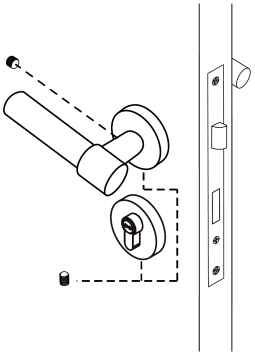

If you have any questions about the installation of this product, please stop and seek professional assistance.

How to reverse the tongue

Step 1:
Move the piece at A to B

Step 2:
Push the tongue into hollow space at the same time

Step 3:
Turn the tongue around and release it

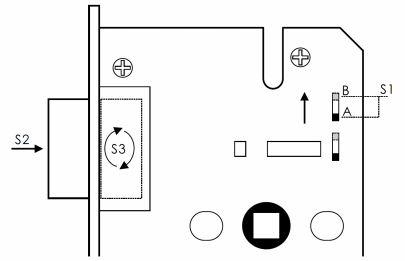

DRILLING INSTRUCTIONS

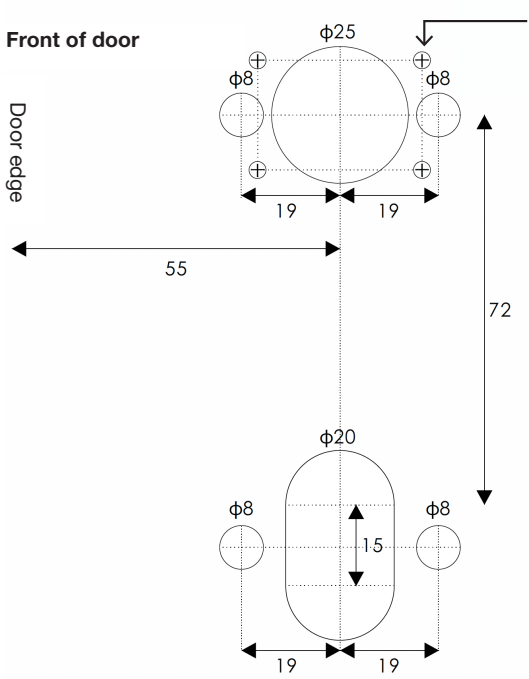

Screw position mark
If the screws are not aligned, the handle may not rebound.

CARE
Do not keep brass in a damp state.

Side

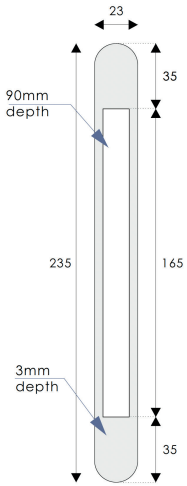

Striker Plate

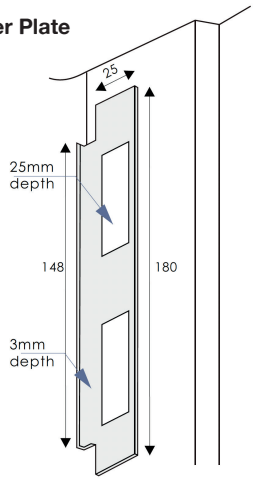

RESIDENCE
SUPPLY



PASSAGE

The Brass Door Handle

INSTALLATION GUIDE

INSTALLATION INSTRUCTIONS

Pre. Drill holes on the door

Step 1:
Put the positioning plastic part on the hole, insert the latch into it, then fix the latch with screws.

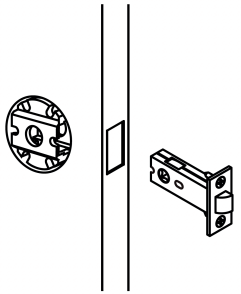

Step 2:
Fix linings with connecting screws (4 corner ones or 2 middle ones), insert the spindle to the latch.

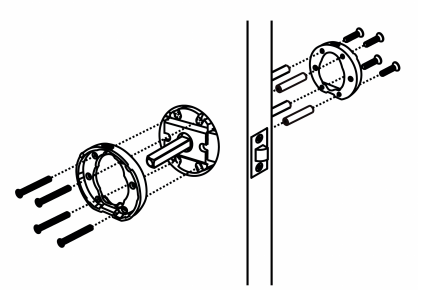

Step 3:
Snap the handles into the linings.

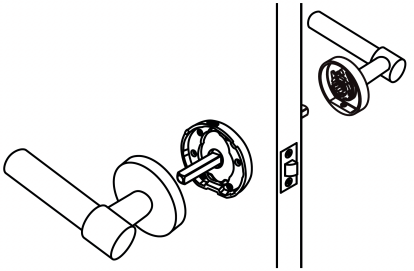

Step 4:
Fix the spindle and the linings to the handles with grub for both sides.

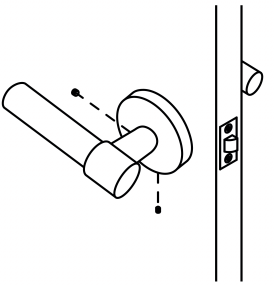

DRILLING INSTRUCTIONS

Measurement: mm

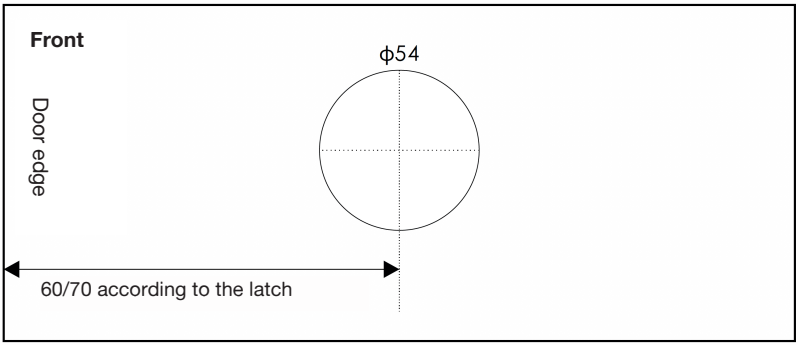

Side

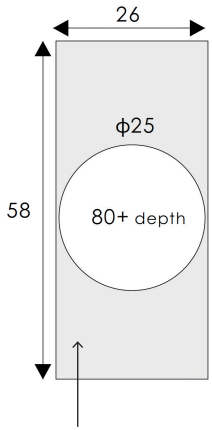

Chisel 4mm depth or until the latch face is flush to the door edge.

Striker Plate

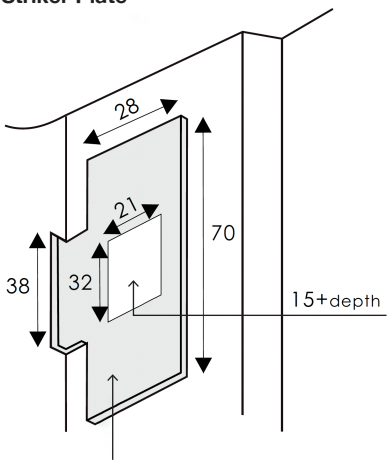

Chisel 2mm depth or until the latch face is flush to the door edge.

CARE
Do not keep brass in a damp state.

RESIDENCE
SUPPLY



PRIVACY

The Brass Door Handle

INSTALLATION GUIDE

INSTALLATION INSTRUCTIONS

Pre. Drill holes on the door, adjust the tongue of the latch by dragging it out to the proper direction.

Step 1:
Put the positioning plastic part on the hole, insert the latch into it, then fix the latch with screws.

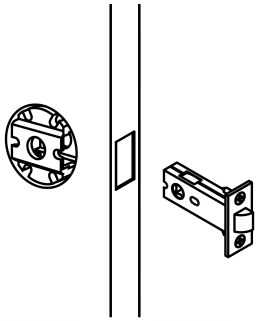

Step 2:
Fix linings with connecting screws (4 corner ones), insert the spindle to the latch, make sure the spindle is locked to the latch.

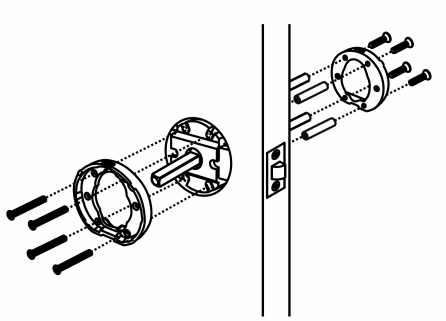

Step 3:
Snap the handles into the linings.
Screw the pin into the threads of the latch.

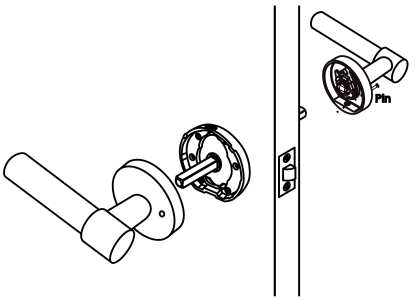

Step 4:
Fix the spindle and the linings to the handles with grub for both sides.

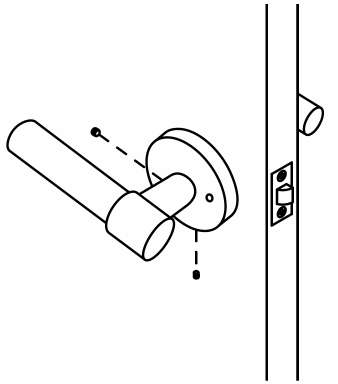

DRILLING INSTRUCTIONS

Measurement: mm

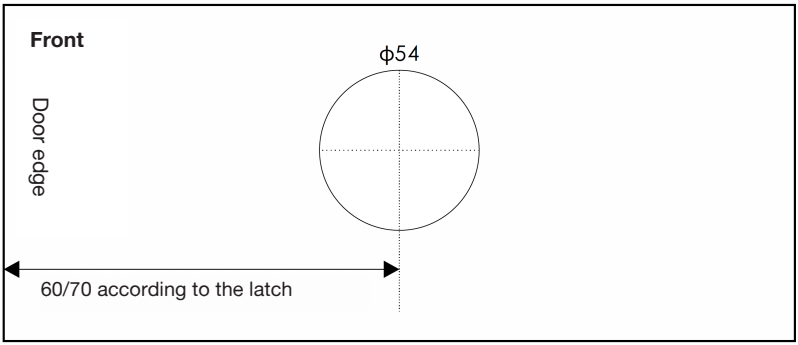

Side

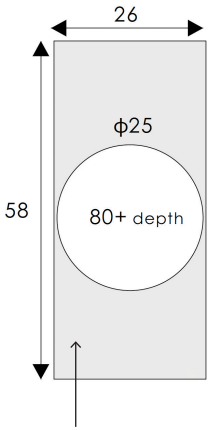

Chisel 4mm depth or until the latch face is flush to the door edge.

Striker Plate

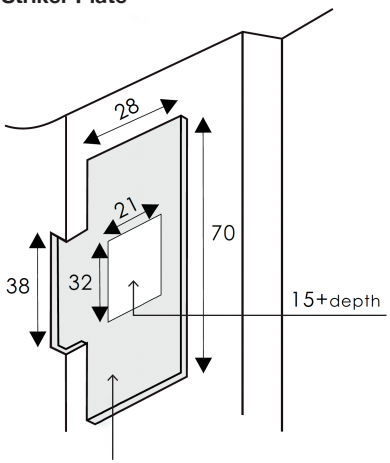

Chisel 2mm depth or until the latch face is flush to the door edge.

CARE
Do not keep brass in a damp state.